

NU6-Ⅲ
Low-voltage Surge Arrester

1. General

1.1 Certificates: international certificates are under proceeding;

1.2 Electric ratings: Single phase power distribution and control system of AC50Hz, 230V;

1.3 Short circuit current: up to 5kA (8/20μs);

1.4 Application: Protect electric system and on-loading electrical apparatus from lightening and instantaneous over-voltage;

1.5 Standard：IEC61643-1, EN61643-11

CE

2. Technical data

Model	Uoc (1.2/50μs) (kV)	Short circuit current Isc (8/20us)(KA)	Max. continuous operational voltage Uc (V~)	Level of protection Up (kV)
NU6-Ⅲ	10	5	275	1.5
			320	1.5
			385	1.5

Auxiliary	Configurations	Rated voltage Un(V)	Rated current In(A)
contact	INO+INC	AC125	3

3. Type and circuit diagram

Model	Type		Circuit diagram	
NU6-Ⅲ	1P+N	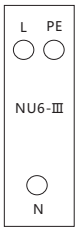	Compound Type	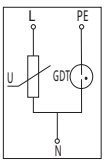
	2P	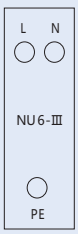	Compound Type	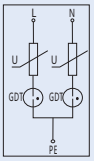

A

4. Design type and protective mode of different surge protectors

Model	Uoc (1.2/50μs) (kV)	Uc (V~)	Corresponding design type and protection mode
NU6-Ⅲ	10	275	Compound type (with gasdischarge tube + voltage sensitive resistance) L-N/N-PE
		320 385	Compound type (with gas discharge tube + voltage sensitive resistance) L-PE/N-PE

5. Functions

5.1 The product is composed of two independent components: removable protective module 4 and base 2;

5.2 When the product is damaged, the part 3 will indicate; please replace the removable protective module 4 at once and there is no need to cutoff the circuits;

5.3 The part 1 is for maximum continuous operational voltage indication as well as avoiding replacement with wrong module.

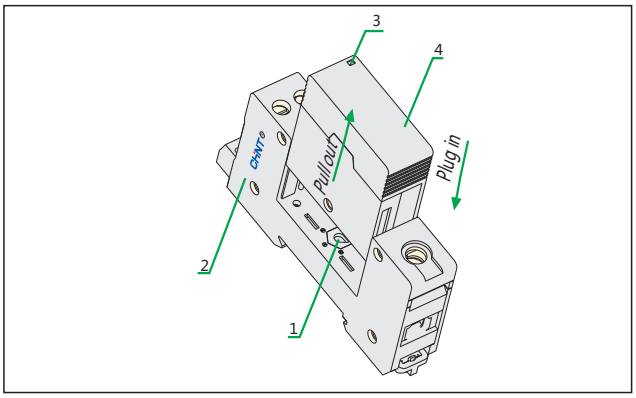

NU6-Ⅲ/F with remote control port

6. Overall and mounting dimensions (mm)

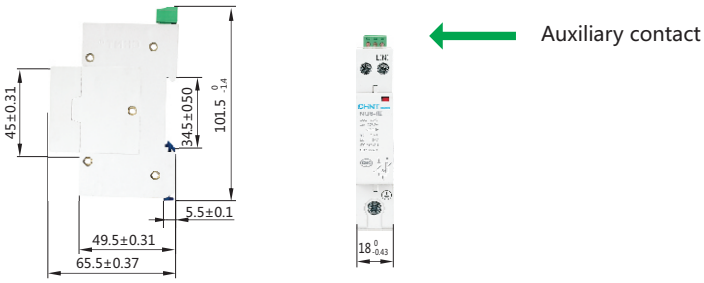

NU6-Ⅲ without remote control port

