

OUVR-2 Self-recovery Overvoltage and Undervoltage Protector

1.Product Features

1.1 Preventing misoperation: Where sudden transient or temporary overvoltage occurs in the line, the protector will not generate misoperation; when the line suffers instable voltage or sudden power recovery after sudden power disruption due to loose contact or other fault, the protector will not close the circuit;

1.2 Reliable operation: Protection is characterized by inverse time lag operation with operating time≤1s;

1.3 Wide scope of voltage protection: 0~450V; in case of maximum fault voltage, the protector itself will not be damaged;

Safer, impulse withstand voltage: 4kV (conforming to the safety standard of category Ⅲ electrical apparatus);

1.4 Condition indication: The protector has the LED to indicate the operating state, where green is normal voltage indication, and red is overvoltage or under voltage indication;

1.5 The product is easy for installation with cable from bottom feed;

1.6 The product only has 27mm with small size;

1.7 External modular design, DIN rail mounting.

2.Scope of Application

2.1 OUVR-2 self-recovery overvoltage and undervoltage protector is a new type of intelligent protection apparatus. With the modular standard design, in case of overvoltage or undervoltage of power supply line, the protector can quickly and safely break the circuit under continuous high voltage surge, avoiding the happening of an accident due to abnormal voltage entry into the terminal apparatus; when voltage resumes normal value, the protector will automatically close the circuit within the specified time to ensure the terminal apparatus can operate normally in an unattended way.

2.2 OUVR-2 self-recovery overvoltage and undervoltage protector is applied for the users or loads of AC 230V, 50Hz and rated operating current 80A and below. It is mainly used in the household distribution box or other distribution line requiring protection.

3. Model and Meanings

OUVR- 2 80A 1P+N

- 1P+N: Number of poles: 1P+N, 3P+N
- 80A: Rated current: 32A, 40A, 50A, 63A, 80A
- 2: Design No
- OUVR-: Self-recovery overvoltage and undervoltage protector

4. Normal Operating Conditions and Mounting Conditions

4.1 Ambient temperature: -35℃ ~+70℃

4.2 Altitude: ≤3000M

4.3 Atmospheric conditions: The atmospheric relative humidity is not more than 50% when the ambient air temperature is +40℃ ; high relative humidity is permitted under low temperature. For example, it may be up to 90% at +20℃ ; special measur es should be taken in case of occasional condensation due to temperature variation;

4.4 Pollution degree: level 2;

4.5 Mounting category: category Ⅱ or Ⅲ .

4.6 Mounting form: It is installed using the TH35-7.5 section steel mounting rail. The inclination of installing surface and vertical plane cannot exceed 5°.

5. Points for Attention

5.1 When the protector is energized for the first time, it needs a time delay of 30±10s before normal power supply of loads.

5.2 Protector conductor N is neutral line, L is live line; connection cannot be done in a wrong way;

5.3 Mode of connection is lower bottom entry and upper exit; bottom entry and I bottom exit; I bottom entry, upper/bottom exit;

5.4 Before use, please tighten the clamping screws to prevent the damage of the product due to loose contact.

5.5 LED indication: green lamp normally on–normal

Red lamp normally on–overvoltage or undervolage

5.6 Neutral line must be connected. When the Neutral line is disconnected, the protector will play a role of protection.

6. Main Parameters and Technical Indices

6.1 Rated voltage : 230V 50Hz

6.2 Rated operating current: 32A, 40A, 50A, 63A, 80A

6.3 Overvoltage operation cutoff value: 275V>>

6.4 Undervoltage operation cutoff value: 161V<<

6.5 Recovery value: 196V~253V

6.6 Time delay close time: 30s±10s

6.7 Electric mechanical life: >50,000 operations

6.8 Power consumption: <2W

6.9 Connection capacity: <25mm^2

7. Installation and Connection

7.1 Before installation, it should first check whether the product mark conforms to the use conditions.

7.2 Connection should be done according to the product marked entry and exit (The load current cannot be higher than the product rated current).

7.3 Pole N cannot be connected in a wrong way, and it must be reliably connected; otherwise, the protector cannot operate normally.

For the connecting conductor section area, refer to Table 1.

Table 1 Section Area and Rated Current of Connecting Conductor

Rated current A	**32**	**40**	**50**	**63**	**80**
Conductor section area mm^2	6	10	10	16	25

8. Overall and mounting dimensions(mm)

Fig.1 Overall and mounting dimensions(mm)

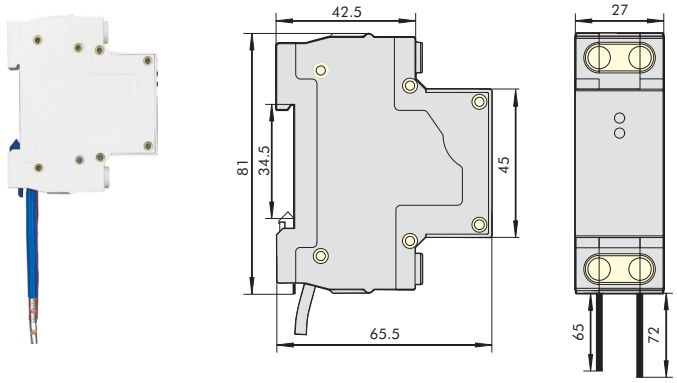

9. Mode of connection

Fig.1 Mode of Connection

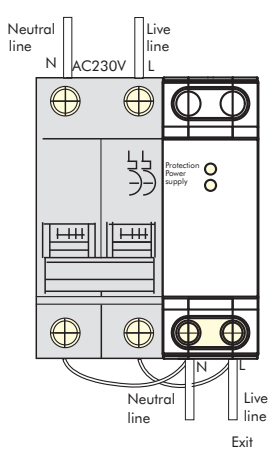

Bottom Entry and Bottom Exit Connection Diagram

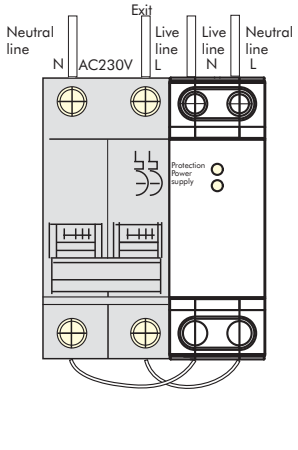

Bottom Entry and Upper Exit Connection Diagram

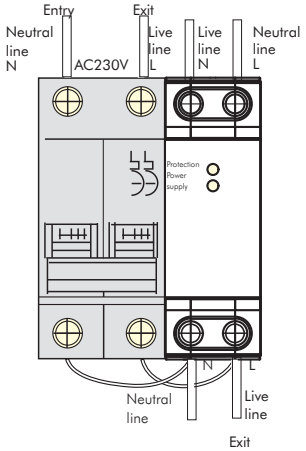

Bottom Entry/Upper and Bottom Exit Connection Diagram

10. Ordering information

10.1 When ordering the goods,the user must shall indicate the product name, type, number of poles, rated voltage, rated current and order quantity:

10.2 Order example: To order OUVR-2 self-recovery overvoltage and undervoltage protector, 1P+N, rated voltage 230V, rated current 40A, quantity: 1000units:

10.3 Please indicate: OUVR-2 1P+N 230V 40A lower bottom entry and upper exit 1000units.