

NU6 - Ⅰ+Ⅱ Surge Protective Device

1. Product Overview

NU6 -Ⅰ+Ⅱ surge protective device conforms to IEC/EN 61643-11 standard. It is applicable to the power distribution and control system with AC 50/60Hz and rated voltage of single phase 230V/three phase 400V. It meets the requirements of SPD Level I and II tests and is used to suppress the transient over-voltage lower than the impulse withstand over-voltage of equipment, discharge the surge energy and protect the system circuit and equipment. Main functional characteristics of surge protective device: It has L-PE, N-PE, L-N protection modes, and is suitable for various power grid systems; With aging and overheating protection, body deterioration indication, plug-in structure, optional remote alarm function.

2. Main Functions

Lightning protection and inlet cabinet surge protection

3. Standard

IEC/EN 61643-11

3. Compliance with certification

CE, CB, RoHS, VDE

4. Selection

N	U	6	Ⅰ+Ⅱ	/F	12.5	275	1P
Company code	Category Codenames	Designed sequence number	Test class	Default: Normal F: With auxiliary contact	Iimp(kA)	Maximum continuous operational voltage(V)	Poles

5. Technical data

Product Model Number	**NU6 Ⅰ+Ⅱ 12.5 1P/2P/3P/4P**		**NU6-Ⅰ+Ⅱ 12.5 1PN/3PN**	
Protection mode	L-PE	N-PE	L-N	N-PE
Impulse current (10/350 μ s) Iimp (kA)	12.5			25/50
Maximum discharge current (8/20 μ s) Imax(kA)	50			40/50
Nominal discharge current (8/20 μ s) In(kA)	25			30/50
Maximum continuous Operational voltage Uc(V)	275/385			255
Level of protection Up(kV)	1.5/1.8			1.5
Leakage current Iie (0.75 U1mA)	<50 μ A/pole			-
Ambient temperature(℃)	-5～+40			
Connecting wire range(mm^2)	2.5 ～ 25			
Recommended connecting lead (mm^2)	Input wire : ≥ 6, Ground wire : ≥ 10			
Tightening torque (N·m)	2			
Pluggable	be			
Remote alarm capability	Optional			
Remote contact switching capability	AC 250V/1A			
	DC 250V/0.1A; 125V/0.2A; 75V/0.5A			
Cross-sectional area of the conductor at the telecommunication terminal (mm^2)	Maximum 1.5			
Mounting method	TH35-7.5 standard guide rail			
Recommended external disconnector	Fuse 125A gL/gG or NXSCB- Ⅰ + Ⅱ 12.5H			

Overall and mounting dimensions

NU6-I+II/F 12.5kA

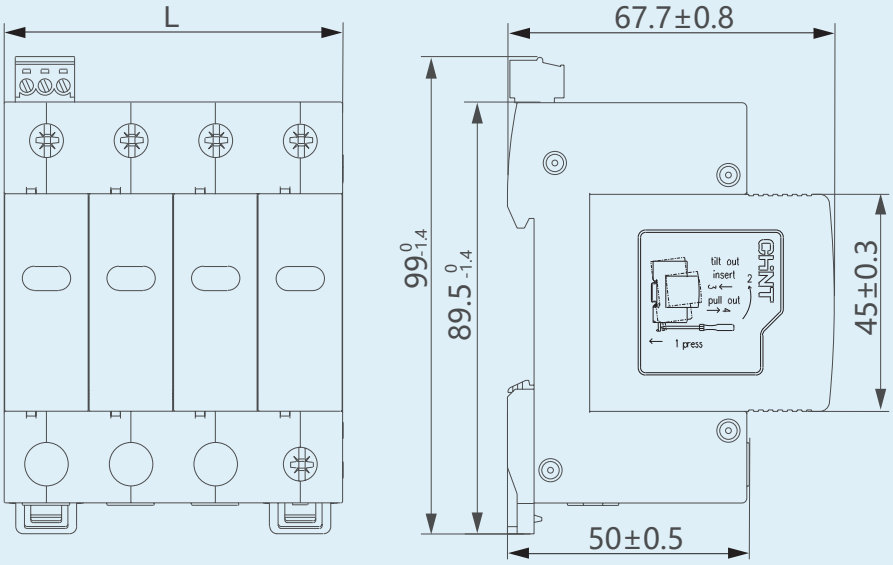

Poles	1P	1P+N, 2P	3P	3P+N, 4P
L(mm)	18 0 -0.6	36 0 -1.2	54 0 -1.8	72 0 -2.4

Unit: mm